Villeroy & Boch 1748

O.novo 530 Oval Under Counter Basin

No Tap Hole

Product Image

Product Details

Code:	**41625001**
Brand:	Villeroy & Boch
Range:	O.novo
Warranty:	10 Years*
Product Width:	530 mm
Product Depth:	320 mm
WELS:	N/A

Additional Features

Required Product

Recommended Products
K316-D waste series

Additional Notes
- Position logo visible at the back of the basin
- manufacturer reserves the right to change specifications without notice
- Dimensional tolerances apply
- No cut out should be attempted in the benchtop without having the basins on hand

Installation Instructions
* Use only silicon based adhesive
* Epoxy adhesive will void basin warranty

Technical Specification

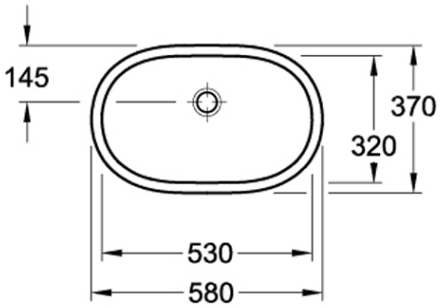

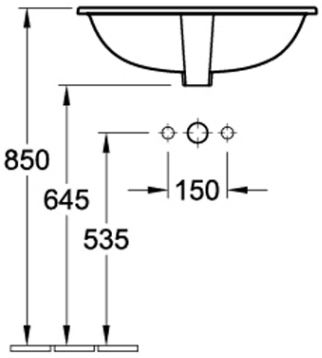

*Please visit **argentaust.com.au/warranty** to view the full warranty

Note: All dimensions are in millimetres and are subject to normal manufacturing variations. Always use the physical product measurements for cut-outs and rough-ins as the technical details shown may differ from the actual product. Use acetic cured silicone sealant. Do not use epoxy type adhesives. Clean with damp cloth. Do not use abrasive cleaners, liquids or pastes.