Bespoke Accessories

Specification Sheet

Bath Caddy

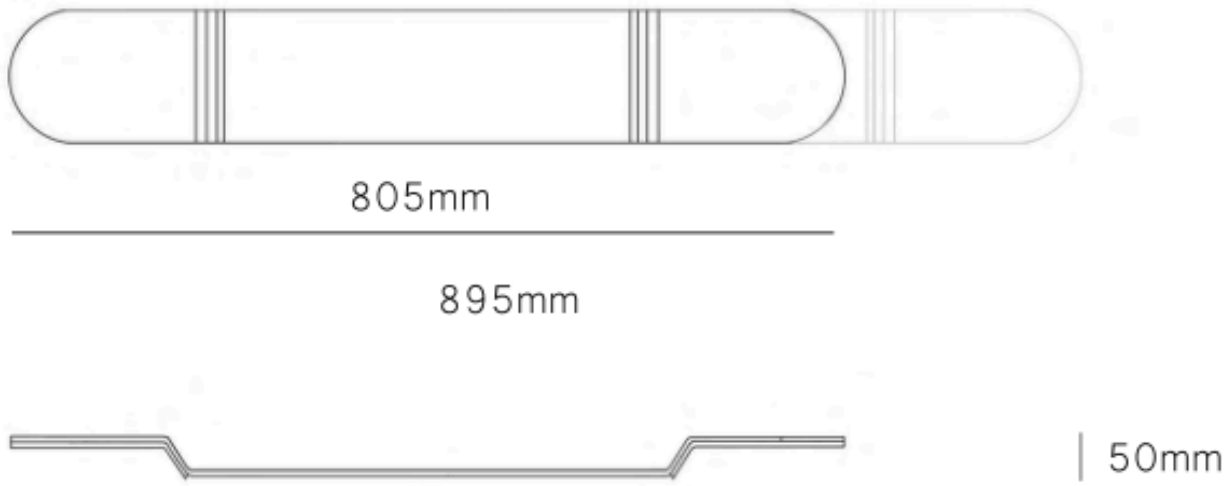

Bath Caddy

BCADDY-S Small
BCADDY-L Large

BESPOKE
BATHWARE

The manufacturer pursues a policy of continual development and improvement and as such: product specifications may be changed without prior notice. All dimensions listed herein are only intended as a guide. Cast products are subject to size variants of +/-5%. The exact colour and finishes of the products may vary from those depicted in the brochures. The manufacturer recommends that for absolute clarity in the selection of options visit nearest Bespoke approved stockiest. Full warranty terms and conditions available on www.bespokebathware.com.au