insinkerator

ADVANCED SERIES

Evolution Plus 750 SR

Benefits

This model offers the following benefits:

- Food waste is ground into particles and flushed away
- A convenient solution to food waste in the home
- Lift & Latch Technology and grips on trim shell make it easy to install into new or existing kitchens and can be fitted to most sinks.
- By using your disposal regularly, you can help divert food waste from landfills and reduce greenhouse gas emissions.

Features

This model offers the following features:

- **0.75 HP induction motor** provides maximum grinding power and durability
- **Quiet SoundSeal Technology**
- **Advanced Grind** for tough and fibrous food scraps
- **3-Stage MultiGrind Technology.** Finest grind (Compared to 1- and 2-Stage MultiGrind Technology)
- **Removable Antimicrobial Baffle**
- Air Switch in 3 finishes (Matte Black, Brushed Steel & Chrome).

Specifications

Type of Feed	Continuous
On/Off Control	Air Switch
Motor	Single Phase
Motor HP	0.75
Volts	220-240
HZ	50-60
Motor Power, W	380 W
Time Rating	Intermittent
Lubrication	Permanently Lubricated Upper & Lower Bearings
Shipping Weight (Approx.)	8.34 kg
Overall Height	31.2 cm
Motor Protection	Automatic Reset
Drain Connection	3.8 cm Cushioned Slip Joint
Dishwasher Drain Connection	No
Grind Technology	3-Stage MultiGrind Technology
Plug	10 amp plug
Grind Chamber Capacity	980 ml

Dimensions

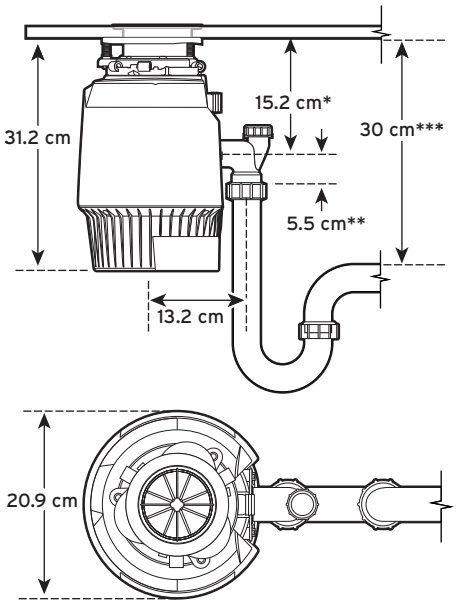

*Distance from bottom of sink to centre line of disposer outlet. Add 12.7 mm when stainless steel sinks are used.

**Length of tailpipe from centre line of disposer outlet to end of tailpipe.

***Distance between bottom of sink bowl to the waste pipe to be minimum of 30 cm.

Warranty

7-Year In-home Limited Warranty*

* Visit www.insinkerator.com.au/home-full-service-limited-warranty for warranty details.

The **ONLY** manufacturer with disposers
INVENTED, DESIGNED & ASSEMBLED in the USA

EX1025-24E-83-10

© All rights reserved.