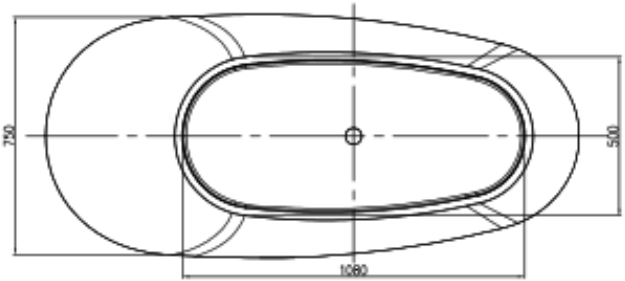

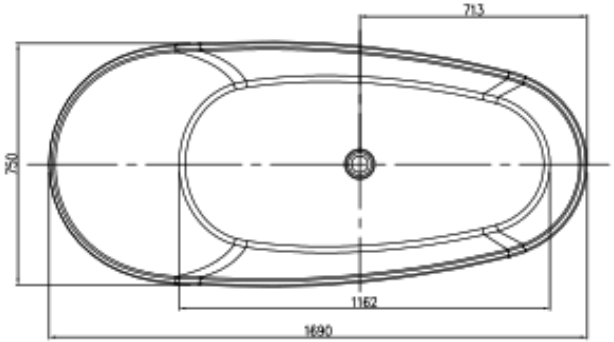

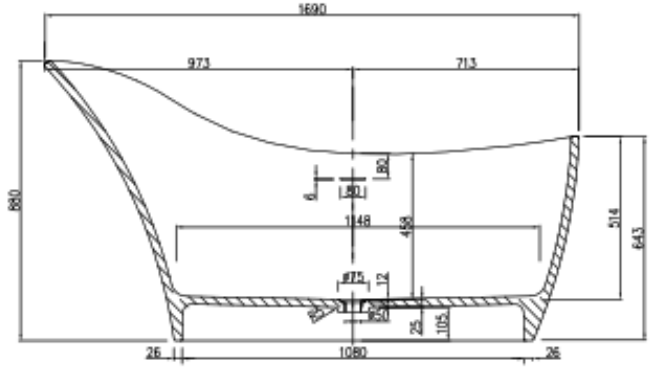

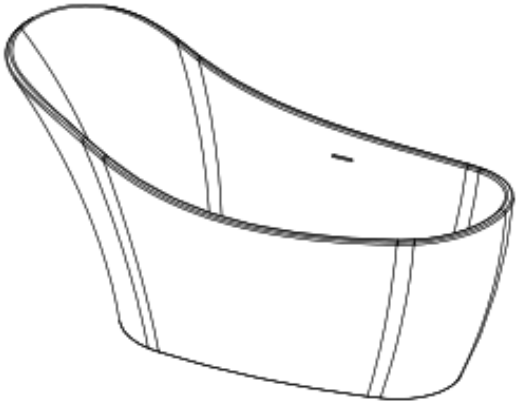

ANNA PB4011

SIZE: 169 CM | APPROX. WEIGHT: 150 KG | WATER CAPACITY: 345 LITRE

+ Pietra Bianca offers an optional overflow drain and/or a complimenting stone drain cover at an additional cost.

PIETRA BIANCA

www.voguespas.com.au

CRAFTED WITH PRECISION, ENGINEERED FOR EXCELLENCE