BERLIN THREE

STYLE

Bench / Wall

CODE

Berlin Three
NTH (URB1200L/0)
2TH (URB1200L/2)

WEIGHT

24 kg

COLOURS

Gloss White

Premium colours + 50%
Matte White
Gloss Black
Matte Black

OVERFLOW & WASTE

32 mm expand waste included.

NOTE

Not glazed at rear

Berlin Bracket

CODE

SBBERBRAC

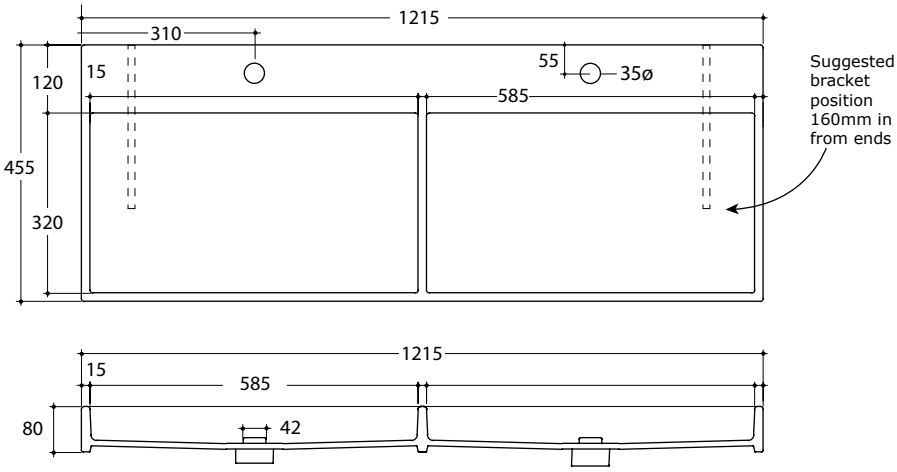

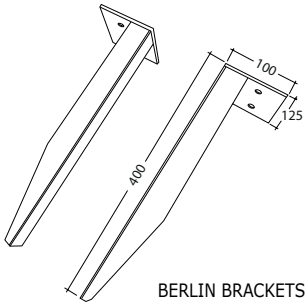

BERLIN BRACKETS

BERLIN THREE

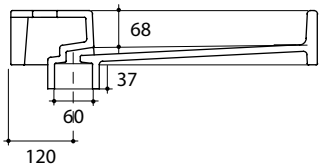

Note: All dimensions are in millimetres and are subject to normal manufacturing variances. Studio Bagno Pty Ltd reserves the right to vary specifications at any time without notice. Date: 14/02/13